		MANUAL CONFIGURATION SETTINGS				
PERIPHERAL NAME	M/A CONFIG.	ADDRESS	BOARD	TB"X"	PIN	ADDITIONAL INFO
REAR LIGHT SENSOR	AUTO	AUTO (ADDRESS 1)				ON DISTRIBUTION BOARD
EXTERNAL TEMP SENSOR	AUTO	AUTO (ADDRESS 1)				ON DISTRIBUTION BOARD
FRONT LIGHT SENSOR	AUTO	AUTO (ADDRESS 5)				ON DISTRIBUTION BOARD
INTERNAL TEMP SENSOR	AUTO	AUTO (ADDRESS 5)				ON DISTRIBUTION BOARD
N.C.						
AMBIENT LIGHT SENSOR	AUTO	AUTO (ADDRESS 4)				ON DISTRIBUTION BOARD
N.C.						
N.C.						
PSG1, POWER SUPPLY GROUP 1	AUTO	AUTO (ADD. 1/2)				DEFAULT
N.C.						
N.C.						
N.C.						
N.C.						
N.C.						
N.C.						
N.C.						
DC I/O BOARD (TB5/8=OUTPUT)	MANUAL	AUTO (ADDRESS 1)	DCIO1			SW5 OFF=OUTPUT
RPM SENSOR #1	MANUAL		MINI 1	TB1	IN 1	# OF FANS
RPM SENSOR #2	MANUAL		MINI 1	TB1	IN 2	# OF FANS
RPM SENSOR #3	MANUAL		MINI 2	TB1	IN 1	# OF FANS
RPM SENSOR #4	MANUAL		MINI 2	TB1	IN 2	# OF FANS
N.C.						
N.C.						
N.C.						
N.C.						
INTAKE FAN	MANUAL		DCIO1	TB2	PIN 1	
FACE FAN	MANUAL		DCIO1	TB2	PIN 2	
FACE HEATER	MANUAL		DCIO1	TB2	PIN 3	
N.C.						
N.C.						
N.C.						
N.C.						
N.C.						
N.C.						
N.C.						
N.C.						
N.C.						
N.C.						
SURGE SUPPRESSOR SS1	MANUAL		DCIO1	TB4	PIN 11	
N.C.						
N.C.						
N.C.						
CABINET HEATERS	MANUAL		DCIO1	TB8	PIN 21	STATUS RELAY-DCIO1-TB4/7-PIN 12

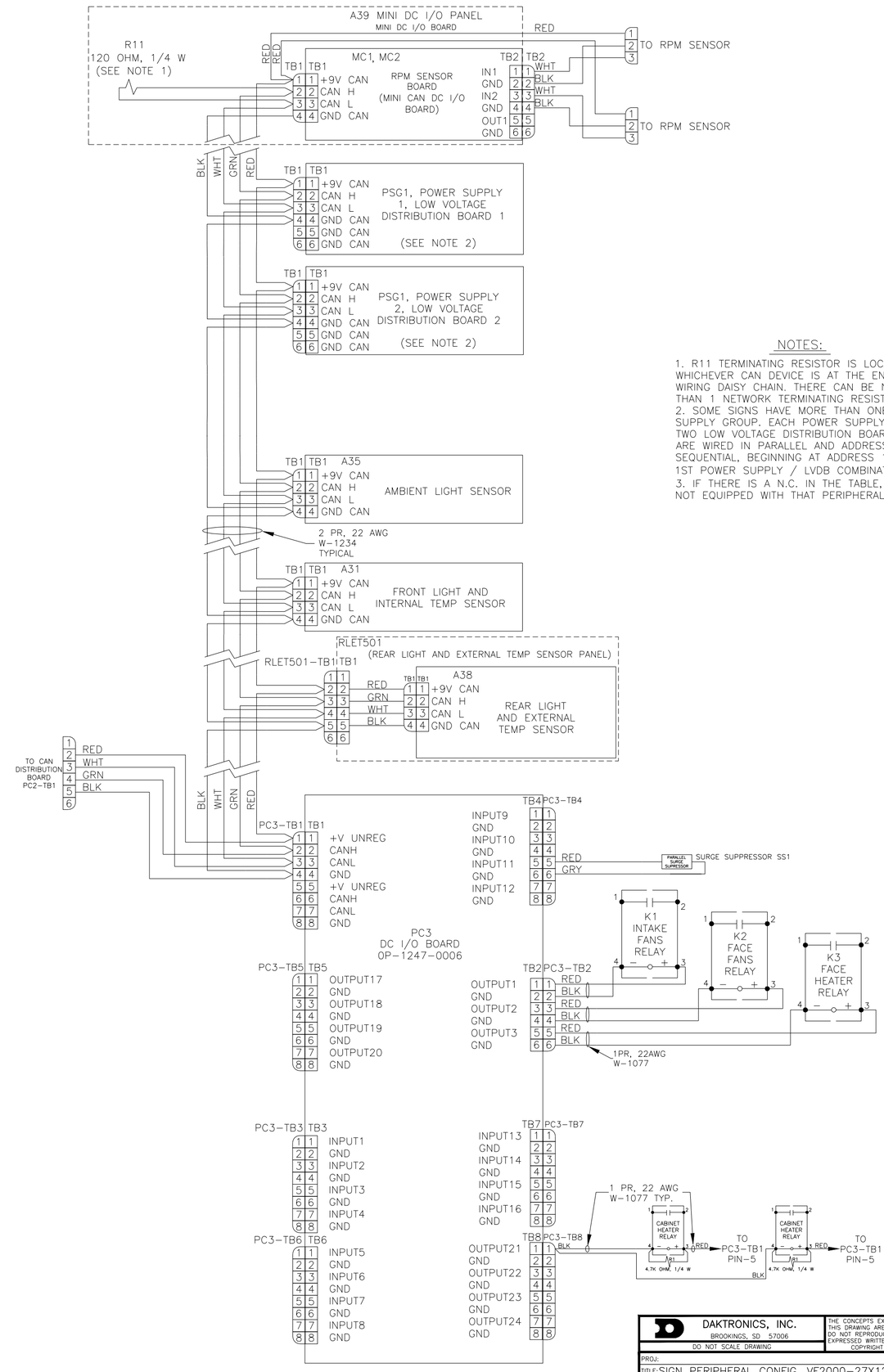

NOTES:

1. R11 TERMINATING RESISTOR IS LOCATED ON WHICHEVER CAN DEVICE IS AT THE END OF THE WIRING DAISY CHAIN. THERE CAN BE NO MORE THAN 1 NETWORK TERMINATING RESISTOR.
2. SOME SIGNS HAVE MORE THAN ONE POWER SUPPLY GROUP. EACH POWER SUPPLY GROUP HAS TWO LOW VOLTAGE DISTRIBUTION BOARDS. ALL LVDB ARE WIRED IN PARALLEL AND ADDRESSES ARE SEQUENTIAL, BEGINNING AT ADDRESS 1 FOR THE 1ST POWER SUPPLY / LVDB COMBINATION IN PSG1.
3. IF THERE IS A N.C. IN THE TABLE, THE SIGN IS NOT EQUIPPED WITH THAT PERIPHERAL.

DAKTRONICS, INC.
BROOKINGS, SD 57006
DO NOT SCALE DRAWING

THE CONCEPTS EXPRESSED AND DETAILS SHOWN ON THIS DRAWING ARE CONFIDENTIAL AND PROPRIETARY. DO NOT REPRODUCE BY ANY MEANS WITHOUT THE EXPRESSED WRITTEN CONSENT OF DAKTRONICS, INC. COPYRIGHT 2010 DAKTRONICS, INC.

PROJ:			
TITLE: SIGN PERIPHERAL CONFIG, VF2000-27X125-66-A			
DESIGN: PLILLA	DRAWN: KSEIDL		DATE: 09 JUN 10
SCALE: NONE			
SHEET	REV	JOB NO:	FUNC-TYPE-SIZE
	00	C17623	F-03-C

1020168