		MANUAL CONFIGURATION SETTINGS				
PERIPHERAL NAME	M/A CONFIG.	ADDRESS	BOARD	TB"X"	PIN	ADDITIONAL INFO
REAR LIGHT SENSOR	AUTO	AUTO (ADDRESS 1)				ON DISTRIBUTION BOARD
EXTERNAL TEMP SENSOR	AUTO	AUTO (ADDRESS 1)				ON DISTRIBUTION BOARD
FRONT LIGHT SENSOR	AUTO	AUTO (ADDRESS 5)				ON DISTRIBUTION BOARD
INTERNAL TEMP SENSOR	AUTO	AUTO (ADDRESS 5)				ON DISTRIBUTION BOARD
N.C.						
AMBIENT LIGHT SENSOR	AUTO	AUTO (ADDRESS 4)				ON DISTRIBUTION BOARD
INTERNAL TEMP SENSOR	AUTO	AUTO (ADDRESS 4)				ON DISTRIBUTION BOARD
N.C.						
PSG1, POWER SUPPLY GROUP 1	AUTO	AUTO (ADD. 1/2)				DEFAULT
N.C.						
N.C.						
N.C.						
N.C.						
N.C.						
N.C.						
N.C.						
DC I/O BOARD (TB5/8=INPUT)	MANUAL	AUTO (ADDRESS 1)	DCIO1			SW5 ON=INPUT
N.C.						
N.C.						
N.C.						
N.C.						
N.C.						
N.C.						
N.C.						
INTAKE FAN	MANUAL		DCIO1	TB2	PIN 1	
N.C.						
N.C.						
N.C.						
N.C.						
N.C.						
N.C.						
N.C.						
N.C.						
N.C.						
N.C.						
N.C.						
SURGE SUPPRESSOR SS1	MANUAL		DCIO1	TB4	PIN 11	
N.C.						
N.C.						
N.C.						
N.C.						

NTCIP VERSION
1

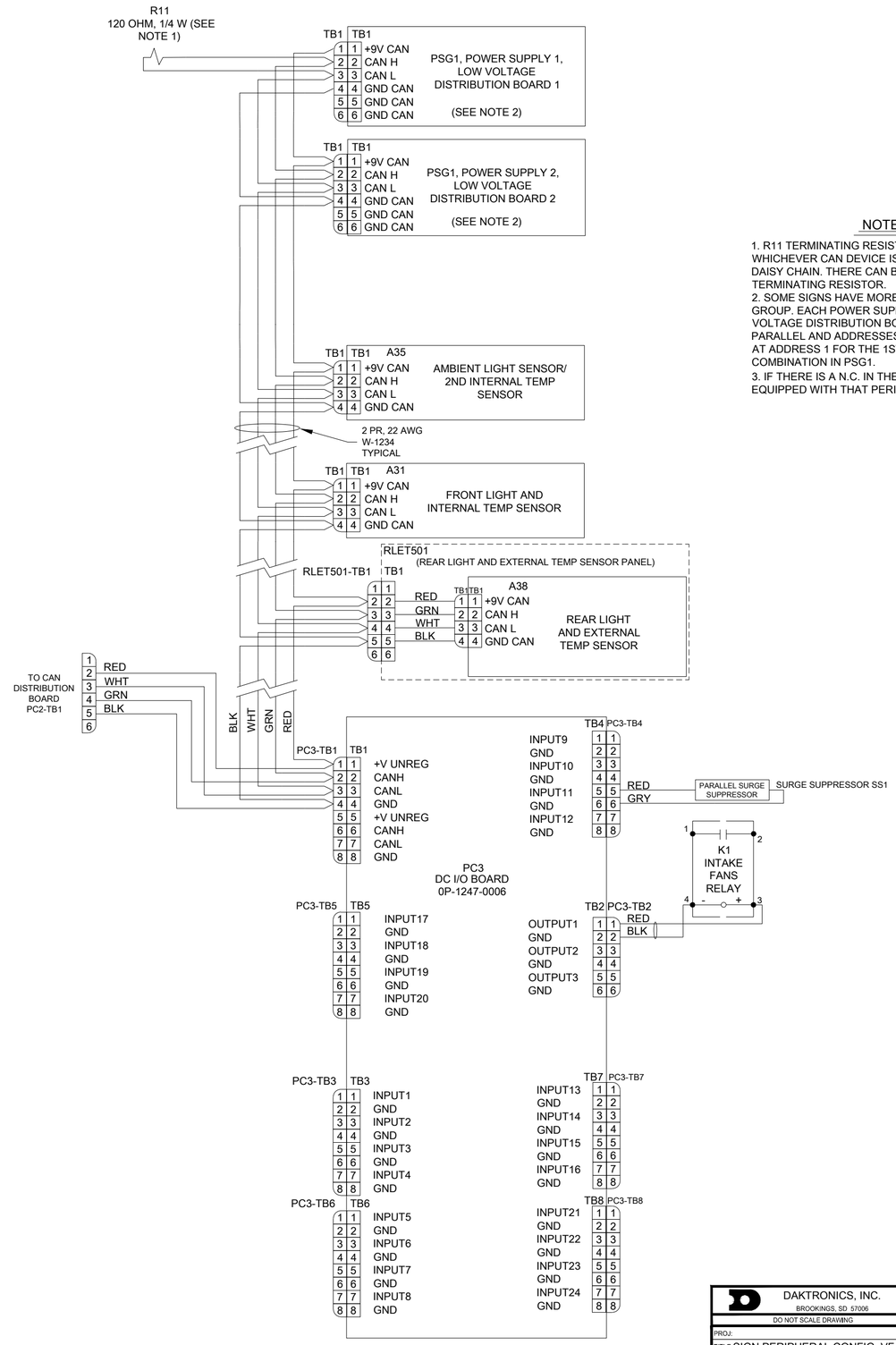

NOTES:

1. R11 TERMINATING RESISTOR IS LOCATED ON WHICHEVER CAN DEVICE IS AT THE END OF THE WIRING DAISY CHAIN. THERE CAN BE NO MORE THAN 1 NETWORK TERMINATING RESISTOR.
2. SOME SIGNS HAVE MORE THAN ONE POWER SUPPLY GROUP. EACH POWER SUPPLY GROUP HAS TWO LOW VOLTAGE DISTRIBUTION BOARDS. ALL LVDB ARE WIRED IN PARALLEL AND ADDRESSES ARE SEQUENTIAL, BEGINNING AT ADDRESS 1 FOR THE 1ST POWER SUPPLY / LVDB COMBINATION IN PSG1.
3. IF THERE IS A N.C. IN THE TABLE, THE SIGN IS NOT EQUIPPED WITH THAT PERIPHERAL.

DAKTRONICS, INC.
BROOKINGS, SD 57006
DO NOT SCALE DRAWING

THE CONCEPTS EXPRESSED AND DETAILS SHOWN ON THIS DRAWING ARE CONFIDENTIAL AND PROPRIETARY. DO NOT REPRODUCE BY ANY MEANS WITHOUT THE EXPRESSED WRITTEN CONSENT OF DAKTRONICS, INC.
COPYRIGHT 2012 DAKTRONICS, INC.

PROJ:
TITLE: SIGN PERIPHERAL CONFIG, VF-2320-32X80-20-A
DESIGN: KSEIDL | DRAWN: KSEIDL | DATE: 02 APR 12
SCALE: NONE

SHEET	REV	JOB NO:	FUNC · TYPE · SIZE	
	00	P19415	F · 03 · C	1091676